riverside®
dream. live. connect.

Entertainment
Windridge
76540

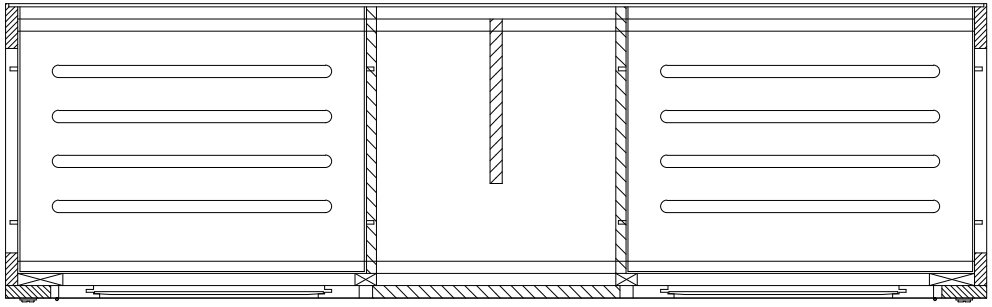

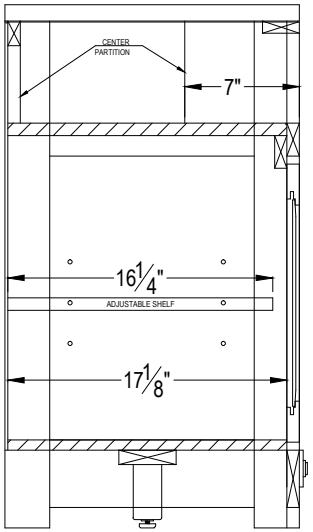

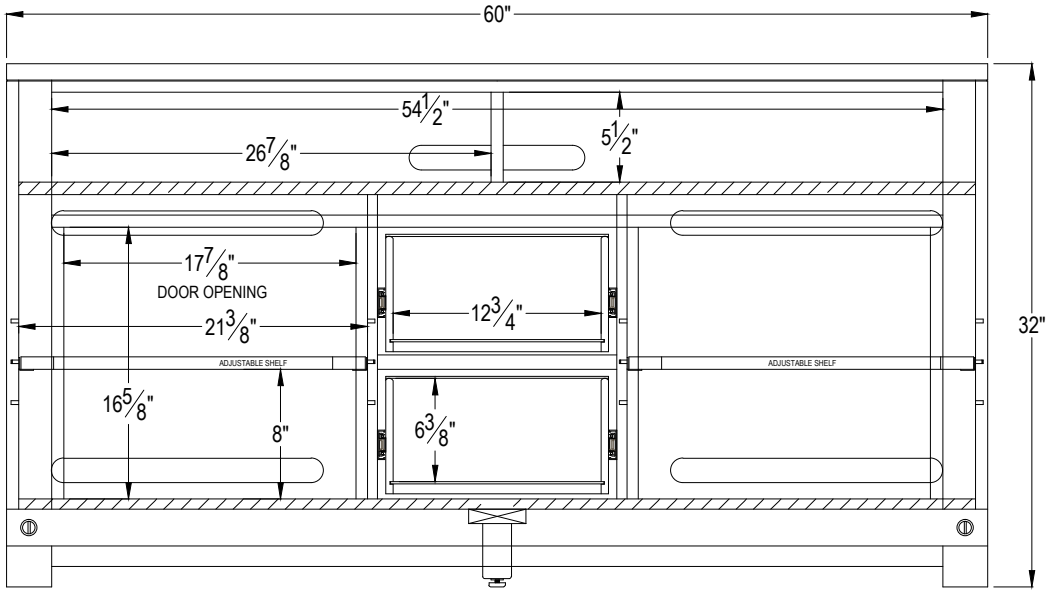

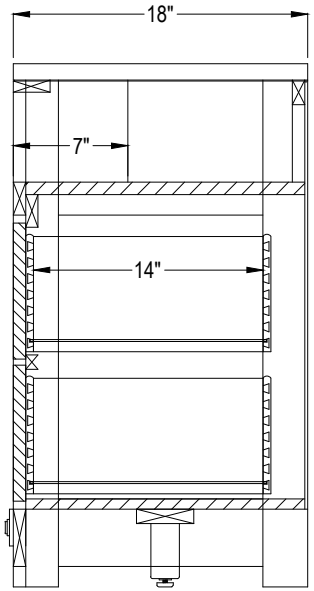

published 03-05-2013