riverside®
dream. live. connect.

Home Office
Coventry
32420
32520

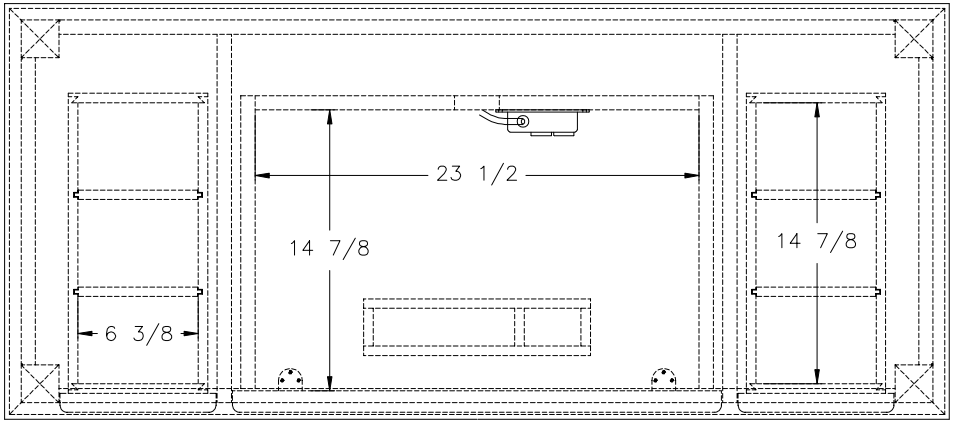

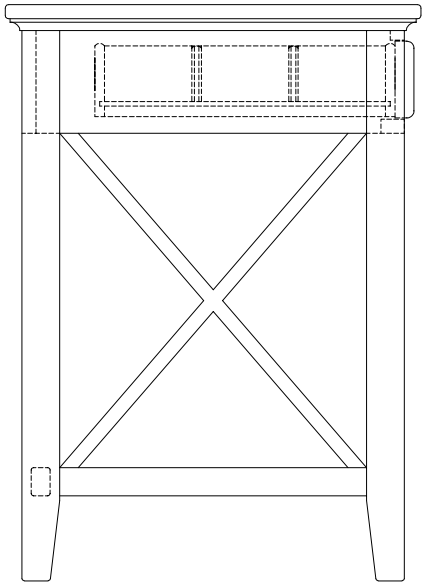

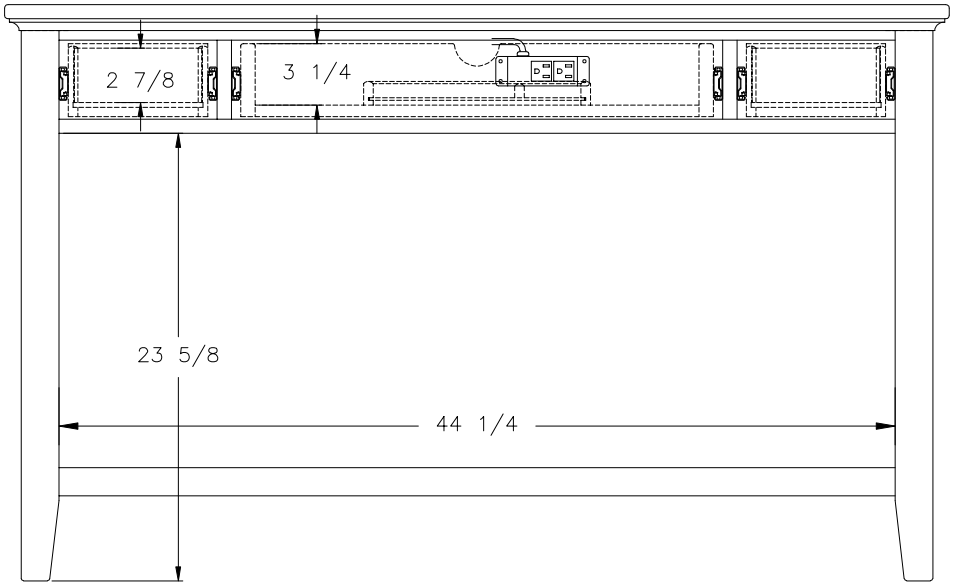

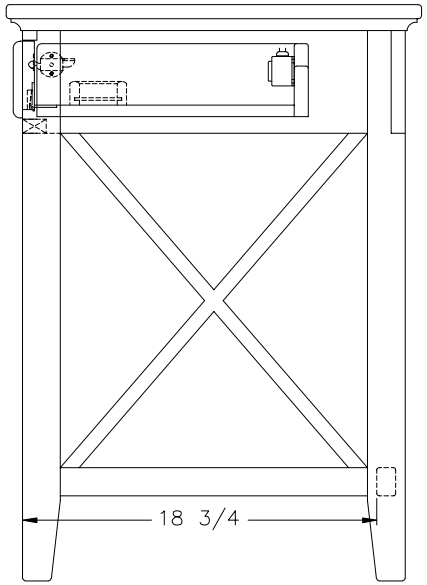

published 08-18-2011