Riverside FURNITURE

email: info@riverside-furniture.com

Placid Cove Entertainment Hutch Assembly Instructions

Made in Viet Nam

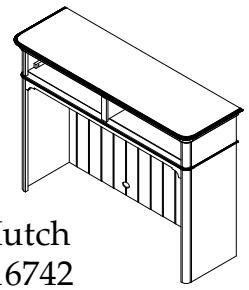

Hutch
#16742

Component And Hardware List

Top Assembly	Side Panel	Back Panel	Cleat	Front Rail
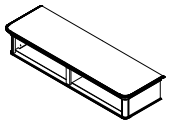	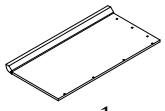	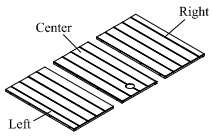	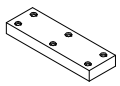	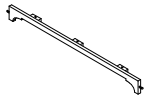
(A) 1 pc.	1 pc. right **(B)** 1 pc. left	**(C)** 3 pcs.	**(D)** 2 pcs.	**(E)** 1 pc.

Bolt Ø5/16" x 38mm	Bolt Ø5/16" x 22mm	Flat Washer Ø5/16"* Ø16mm	Spring washer Ø5/16"	4mm Allen Wrench	Plastic Plug	Anti-Tip Restraint Kit	Metal Plate
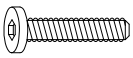	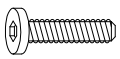						
(F) 19 pcs.	**(G)** 12 pcs.	**(H)** 29 pcs.	**(I)** 29 pcs.	**(J)** 1 pc.	**(K)** 12 pcs.	**(L)** 2 pcs.	**(M)** 2 pcs.

⌀4 x 15mm Screw	Bolt Ø1/4" x 35mm	Spring washer Ø1/4"	Flat Washer Ø1/4"* Ø16mm
(N) 8 pcs.	**(O)** 5 pcs.	**(P)** 5 pcs.	**(Q)** 5 pcs.

Be sure to check all packing material carefully for small parts, which may have come loose inside the carton during shipment. Separate, count and check all parts against the Components and Hardware List above. *Failure to use the correct length bolts in the proper locations may result in an unsafe product and could also cause damage to the parts being assembled.*

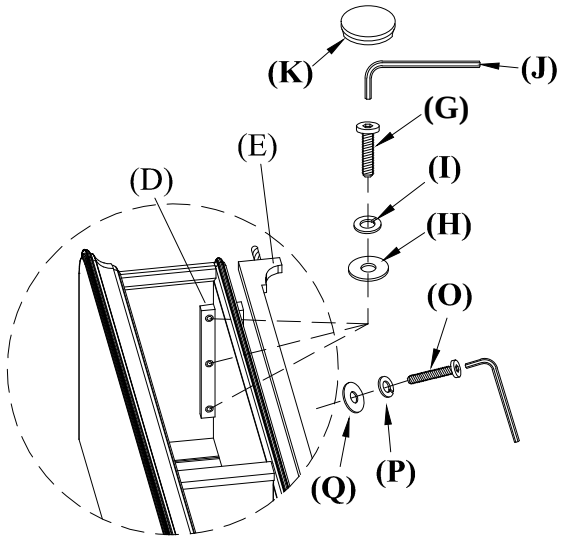

DETAIL A

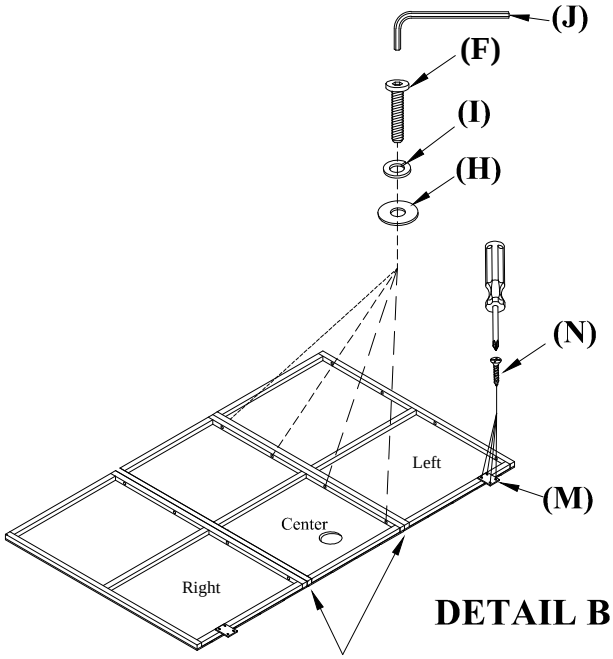

DETAIL B

ASSEMBLY PROCEDURE:

1. Place the Top Assembly (A) on its back, on a soft and smooth surface.

2. Assemble Cleat (D) to the Top Assembly by using Bolt (G) Spring Washer (I) & Flat Washer (H) as shown in **DETAIL A.** Tighten with Allen Wrench (J). Assemble the Front Rail (E) to the bottom of the Top Assembly using the 1/4" Bolts (O), Spring Washers (P) and Flat Wahers (Q). DO NOT FULLY TIGHTEN UNTIL the end of step 4.

3. Assemble the Left & Right Back Panels to the Center Back Panel with the Bolts (F), Spring Washers (I) and Flat Washers (H), Flush the ends of the panels and tighten with the Allen Wrench. Attach the Metal Plates (M) to the bottom back edge of the Back Panels using the Wood Screws (N) and your Phillips Screwdriver, as shown in **Detail B**.

Note: To prevent cracks between parts, check that all parts are flush at the ends and edges, before fully tightening Bolts.

THANK YOU FOR YOUR PURCHASE.

Made in Viet Nam

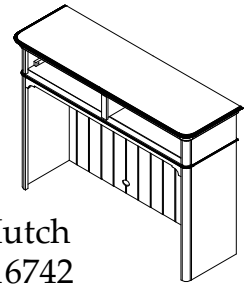

Hutch
#16742

4. Place the Top Assembly upside down, on its top. Carefully assemble the Left and Right Side Panels to the Front Rail (E) and to the Top Assembly. Attach at the ends through the Cleats using the Bolts (G) Spring Washers (I) & Flat Washers (H) and at the ends of the Front Rail using the Bolts (O), Spring Washers (P) and Flat Washers (Q), as shown in **DETAIL C.** Tighten with Allen Wrench (J). Insert the Plastic Caps (K) over the Bolts going through the Cleats.

DETAIL C

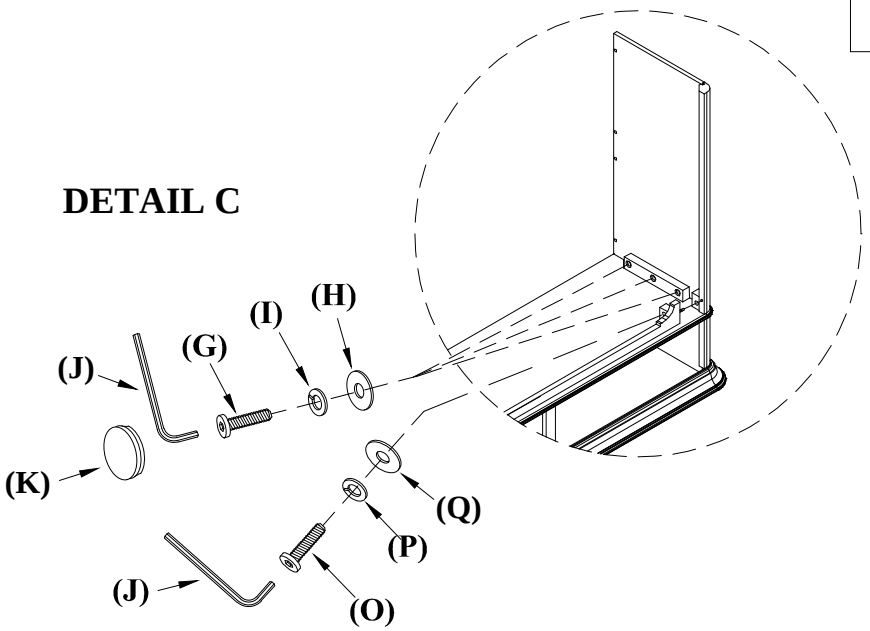

5. Carefully assemble the Back Panels to the Top Assembly and Side Panels as shown in **DETAIL D using Bolts (F) and Spring Washers (I) and Flat Washers (H).** Tighten all Bolts with the Allen Wrench (J).

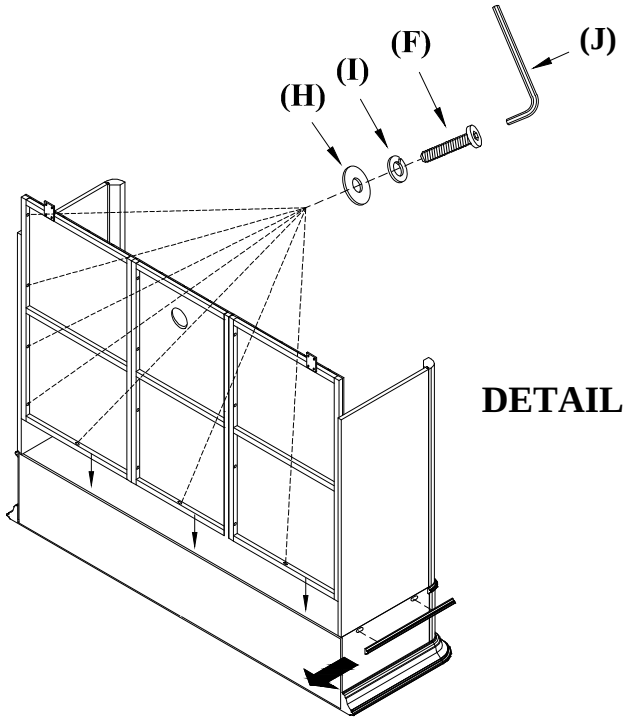

DETAIL D

5. Using two people, carefully turn the assembled Hutch upright.
6. If using the Piers, then remove the side moulding by sliding them towards the back of the Hutch as shown in **DETAIL D.**

Riverside FURNITURE

email: info@riverside-furniture.com

Placid Cove Entertainment Assembly Instructions

Made in Viet Nam

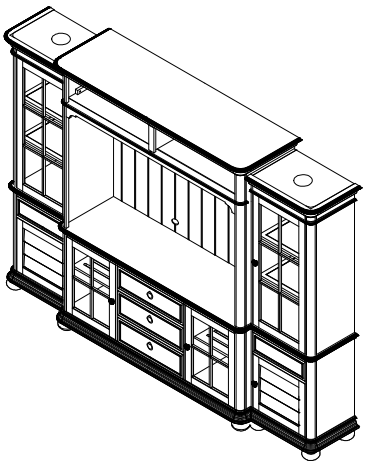

Item #16740/#16742
#16748/#16749

Be sure to check all packing material carefully for small parts, which may have come loose inside the carton during shipment.

Component And Hardware List

16742 Hutch	16740 TV Console	16748/16749 Pier L&R
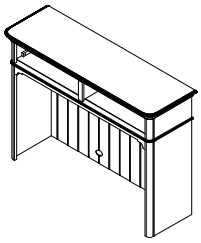	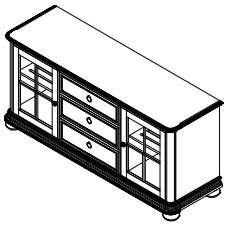	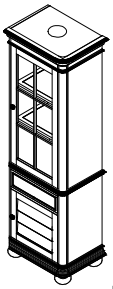
1 PC.	1 PC.	2 PCS.

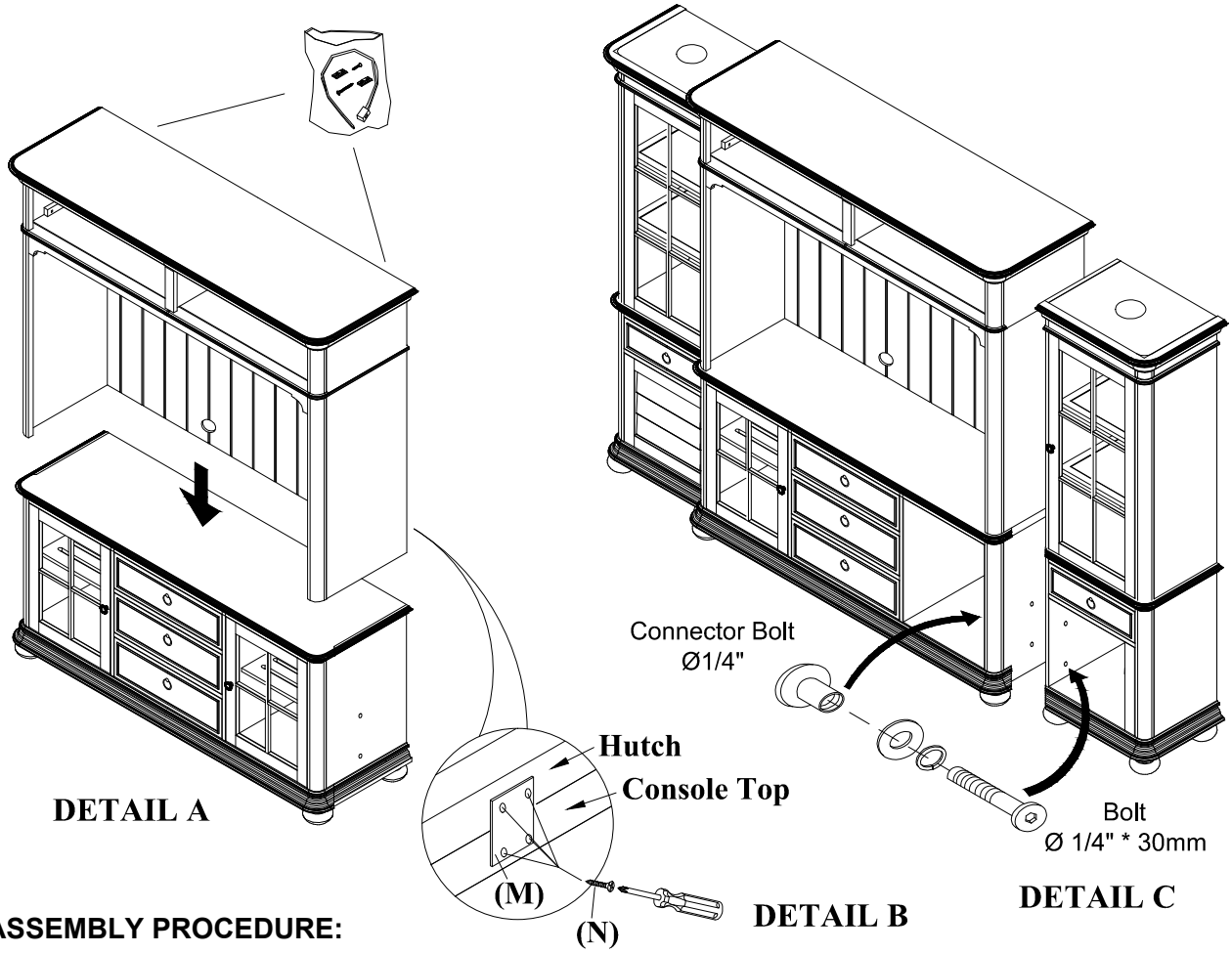

ASSEMBLY PROCEDURE:

1. Carefully place the Hutch onto the top of the TV Console, as shown in **DETAIL A.**
2. Using the Metal Plates (L), Screws (M) and your Phillips Screwdriver, attach the Hutch to the top of the TV Console.
3. Place the Left Pier & Right Pier on the two sides of the TV Console.
4. After moving the Console and Pier cabinet together, connect units together using the Connector Bolts through the holes in the sides as shown in **DETAIL C.**

If no Piers are being used, then install the Wood Plug into the holes on the outside of the TV Console.

THANK YOU FOR YOUR PURCHASE.

Riverside FURNITURE

email: info@riverside-furniture.com

Anti-Tip Hardware Installation Instructions

Notice: Riverside Furniture Corp. recommends that steps be taken for certain furniture items to prevent or minimize the risk of tip-over. This furniture is equipped with Tip-over Restraint Hardware for use to minimize this risk, if used. Please follow below installation steps. Riverside Furniture Corp. recommends that parents and guardians periodically visit the U.S. Consumer Product Safety Commission (CPSC) website at http://www.cpsc.gov/ and stay up to date on all issues related to children's product safety.

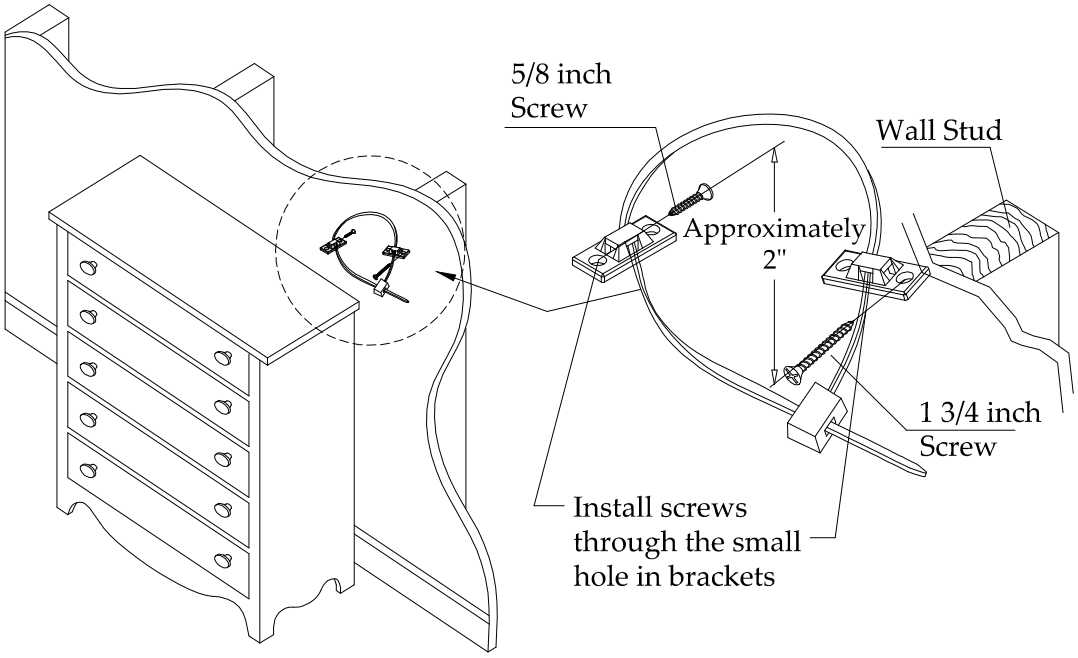

1. Temporarily locate the furniture to near it's final location in the room next to a wall. Locate a wall stud behind your furniture and also mark the stud's location on the back of your furniture.

2. Firmly attach one bracket to the stud approximately 2" below the top of the furniture with the **1 3/4 inch long** Wood Screws provided. It may be necessary to drill 3/32 dia. pilot holes for the screws.

3. Firmly attach the other bracket onto a solid, structural part on the back of the furniture using the **5/8 inch long** Wood Screws. It may also be necessary to pilot bore for these screws.

4. Move the furniture into its final position, taking care to line up the wall bracket with the furniture bracket. Thread a strap through the bracket as shown in the illustration. Tighten strap until snug but do not over tighten.

Caution: Riverside Furniture Corp. assumes no liability for improper installation or excessive loads placed on screws, brackets or straps. Failure to detach this restraint before moving furniture may result in personal injury and property damage.

Warning: This tip-over restraint is not to be a substitute for proper adult supervision. Do not allow children to climb on furniture. Items left on top of the TV and furniture, such as toys, remote controls and treats might tempt young children to climb. Push the TV as far back as possible from the front of its stand. Place electrical cords out of a child's reach, and teach children not to play with the cords.