Riverside FURNITURE

email: info@riverside-furniture.com

Bella Vista Curved Writing Desk Assembly Instructions

Made in China

93027
Curved Writing Desk

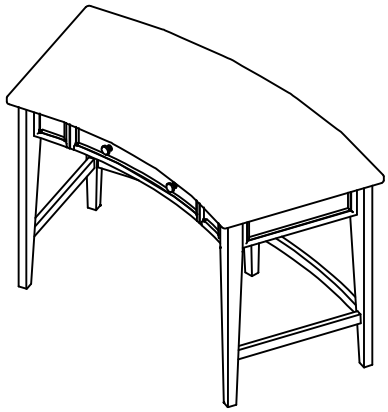

Components and Hardware List

M5/16" x 2 1/4" Allen Head Bolt	5/16" Spring Washer	5/16" Flat Washer	5mm Allen Wrench
A 10 pcs.	B 10 pcs.	C 10 pcs.	D 1 pc.

Table Top	Front Legs-Left & Right	Back Legs
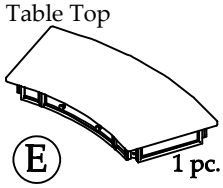		
E 1 pc.	F 1 Pair	G 1 Pair

Center Back Leg	Side Stretchers	Back Stretchers
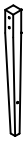		
H 1 pc.	I 2 pcs.	J 2 pcs.

1 1/4" Wood Screw
K 8 pcs.

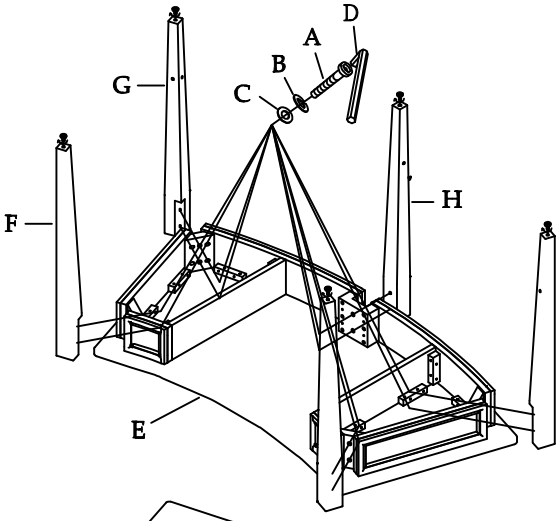

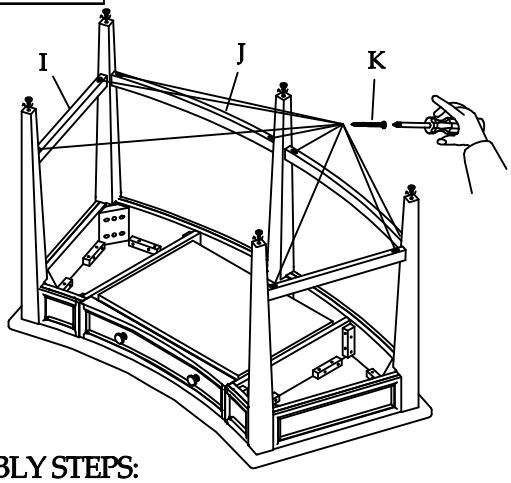

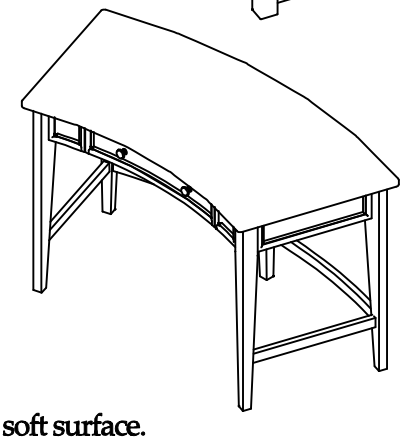

ASSEMBLY STEPS:

1. Carefully place the Desk Top upside down on a clean and soft surface.
2. Assemble the Front Legs (F), the Left and Right Back Legs (G) and the Center Back Leg (H) to each corner and back center of the apron frame using the Allen-Head Bolts (A), Spring Washers (B) and Flat Washers (C). Do not fully tighten until after next steps.
3. Assemble the Side Stretchers (I) and the Back Stretchers (J) between the legs. While pulling the Leg and Stretcher firmly together, install the Wood Screws (K) using your Phillips screwdriver. Tighten all the bolts attaching the Legs using the Allen Wrench (D).
4. With 2 people, carefully set the Desk upright. To prevent undue stress on the legs, always carry the desk from one location to another.