Riverside
FURNITURE

email: info@riverside-furniture.com

Promenade
Home Office
Assembly Instructions

Made in China

Components and Hardware List

Wood Shelf

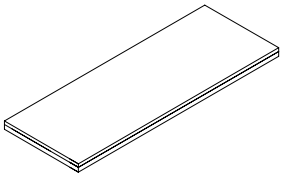

(A) 1 pc.

Glass Shelf

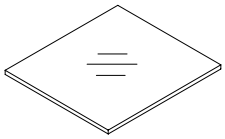

(B) 2 pcs.

Shelf Pins

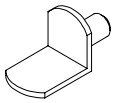

(C) 12 pcs.

Anti-Tipping Restraint

(D) 1 pc.

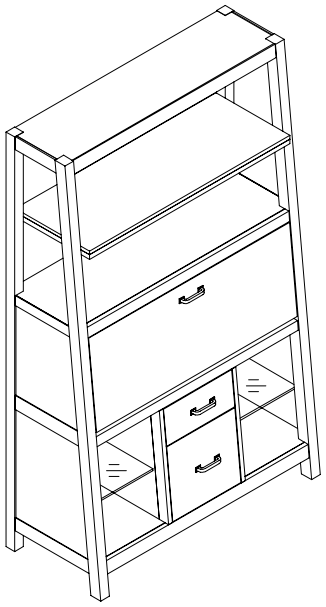

84530 CANTED COMPUTER DESK

Be sure to check all packaging materials for small parts which may have came loose during shipping.

Note:
Always support the Drop Down Work Surface when opening to prevent undue stress to the supports and worksurface.

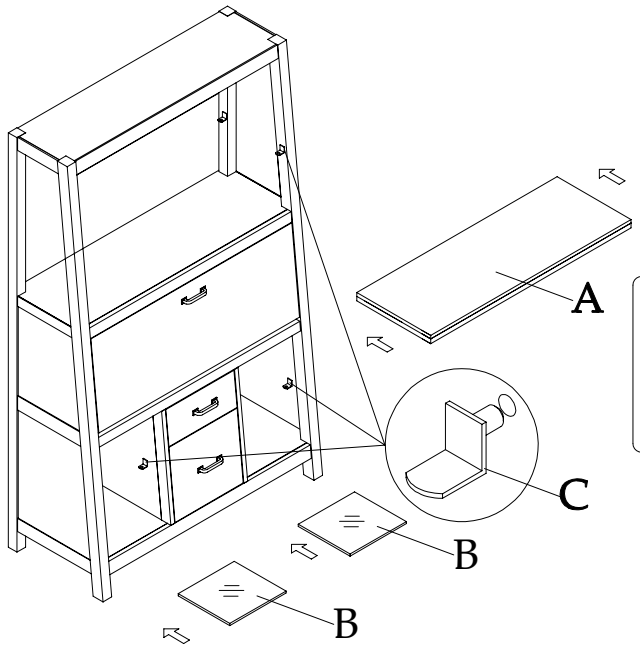

Anti-Tipping Restraint Kit (D)

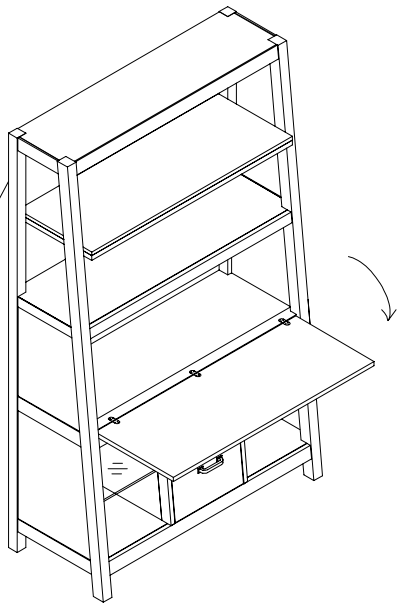

ASSEMBLY STEPS:

1. Insert the Shelf Pins (C) into the holes in the side panels at the desired levels. Carefully place the Wood Shelf (A) and the Glass Shelf(B) on the shelf pins.

2. The levelers in the bottom of the legs can be adjusted if necessary to compensate for uneven flooring.

Riverside FURNITURE

email: info@riverside-furniture.com

Anti-Tip Hardware Installation Instructions

Notice: In homes where small children may be present, Riverside Furniture Corp. recommends that steps be taken for certain furniture items to prevent or minimize the risk of tip-over. This furniture is equipped with Tip-over Restraint Hardware for use to minimize this risk, if used. Please follow below installation steps. Riverside Furniture Corp. recommends that parents and guardians periodically visit the U.S. Consumer Product Safety Commission (CPSC) website at http://www.cpsc.gov/ and stay up to date on all issues related to children's product safety.

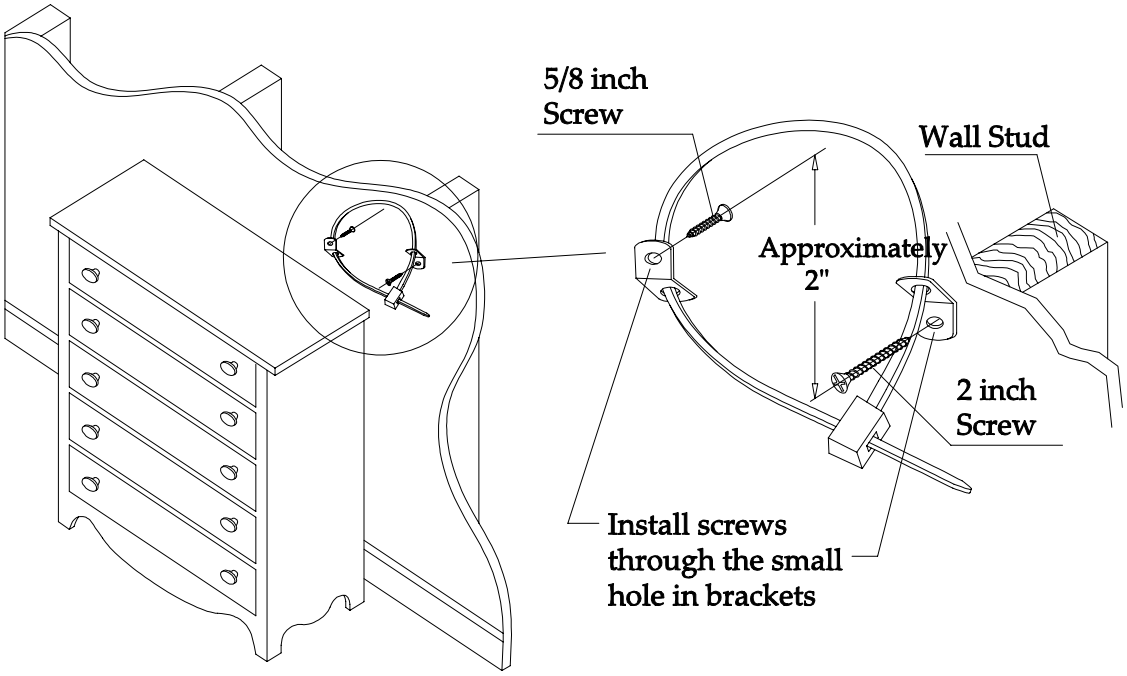

1. Temporarily locate the furniture to near it's final location in the room next to a wall. Locate a wall stud behind your furniture and also mark the stud's location on the back of your furniture.

2. Firmly attach one bracket to the stud approximately 2" below the top of the furniture with the **2 inch long** Wood Screws provided. It may be necessary to drill 3/32 dia. pilot holes for the screws.

3. Firmly attach the other bracket onto a solid, structural part on the back of the furniture using the **5/8 inch long** Wood Screws. It may also be necessary to pilot bore for these screws.

4. Move the furniture into its final position, taking care to line up the wall bracket with the furniture bracket. Thread a strap through the bracket as shown in the illustration. Tighten strap until snug but do not over tighten.

Caution: Riverside Furniture Corp. assumes no liability for improper installation or excessive loads placed on screws, brackets or straps. Failure to detach this restraint before moving furniture may result in personal injury and property damage.

Warning: This tip-over restraint is not to be a substitute for proper adult supervision. Do not allow children to climb on furniture. Items left on top of the TV and furniture, such as toys, remote controls and treats might tempt young children to climb. Push the TV as far back as possible from the front of its stand. Place electrical cords out of a child's reach, and teach children not to play with the cords.