Riverside FURNITURE

email: info@riverside-furniture.com

Allegro Home Office Assembly Instructions

Made in China

Components and Hardware List

Grommet	Flat Washer	Lock Washer	Allen Head Bolt 1/4" x 1-1/2"	4 mm Allen Wrench
A 3 pcs.	B 10 pcs.	C 10 pcs.	D 10 pcs.	E 1 pc.
Key	**Bun Foot W/ Leveler**	**Wood Shelf**	**Shelf Pin**	**File rod & clips**
F 1 Set.	G 11 pcs.	H 1 pc.	I 4 pcs.	J 2 sets

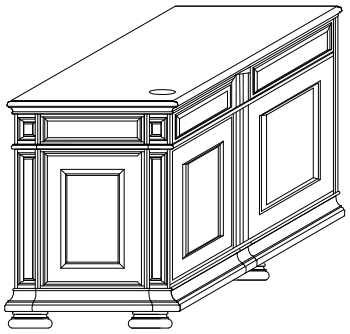

44728 L Return Desk

Be sure to check all packing material carefully for small parts, which may have come loose inside the carton during shipment.

Step 1: Place the return desk on a clean, soft surface such as a blanket or carpet. Assemble the four Bun Feet (G) onto the Bottom. Carefully set it upright.

Step 1

Step 2: Assemble the Back Panel to the Return Desk, using Allen-Head Bolts (D) Spring Washers (C) and Flat Washers (B). Tighten the Allen Bolts using the Allen Wrench (D).

Step 3: Remove the middle drawer from the drawer Pedestal (see below).

Step 4: Assemble the Top Panel to the Return Desk, using Allen-Head Bolts (D) Spring Washers (C) and Flat Washers (B). Tighten the Allen Bolts using the Allen Wrench (D).

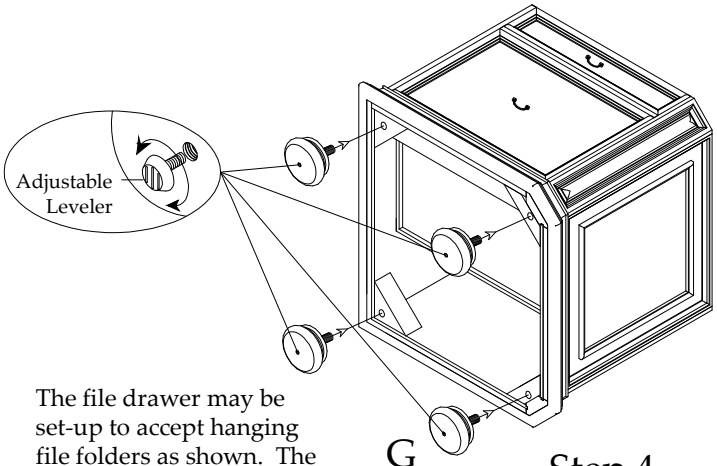

Step 4

The file drawer may be set-up to accept hanging file folders as shown. The wood screws provided can be used to attach the file bars to the drawer sides to help keep the files from shifting in the drawers.

Step 3

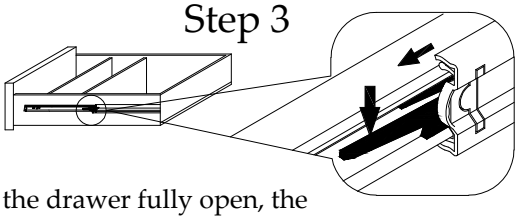

With the drawer fully open, the drawer slides must be released by pressing the black lever located in the slide either up or down, depending on which slide is being released. With both levers pressed, gently pull the drawer until the slides release.

Carefully reinstall the drawers by aligning the channels of the drawer slides and gently pushing the drawers back into the cabinet.

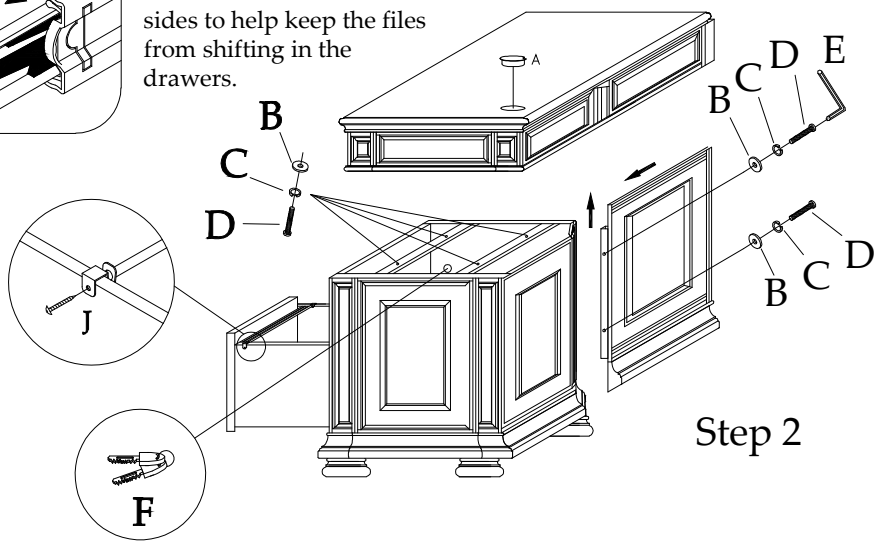

Step 2

Riverside
FURNITURE

email: info@riverside-furniture.com

Allegro Home Office
Assembly Instructions

Made in China

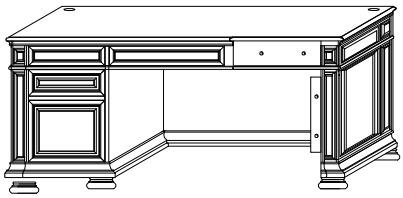

44728 L Return Desk

Step 5: Place the L Desk on a clean, soft surface such as a blanket or carpet. Remove and discard the shipping rails attached to the bottom of the Desk.

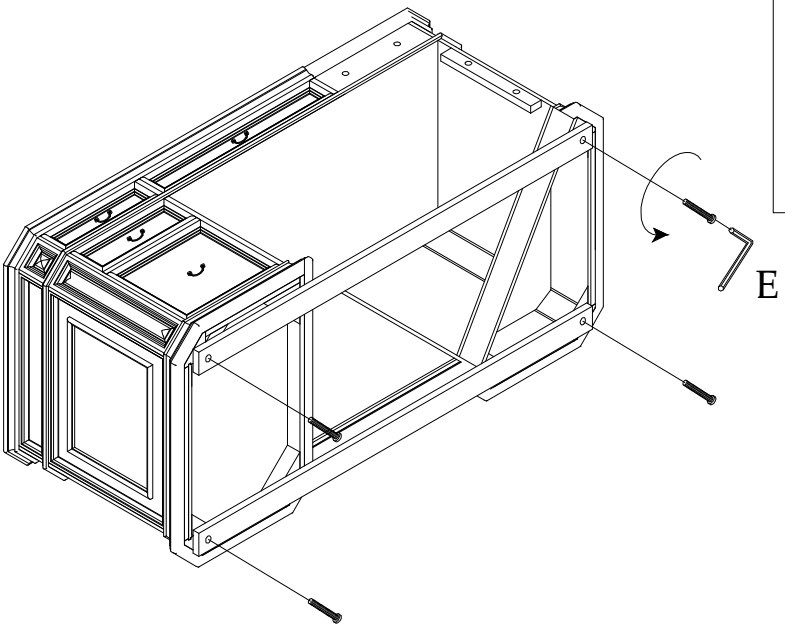

Step 6: Assemble the seven Bun feet onto the Bottom. Carefully set the Desk back upright.

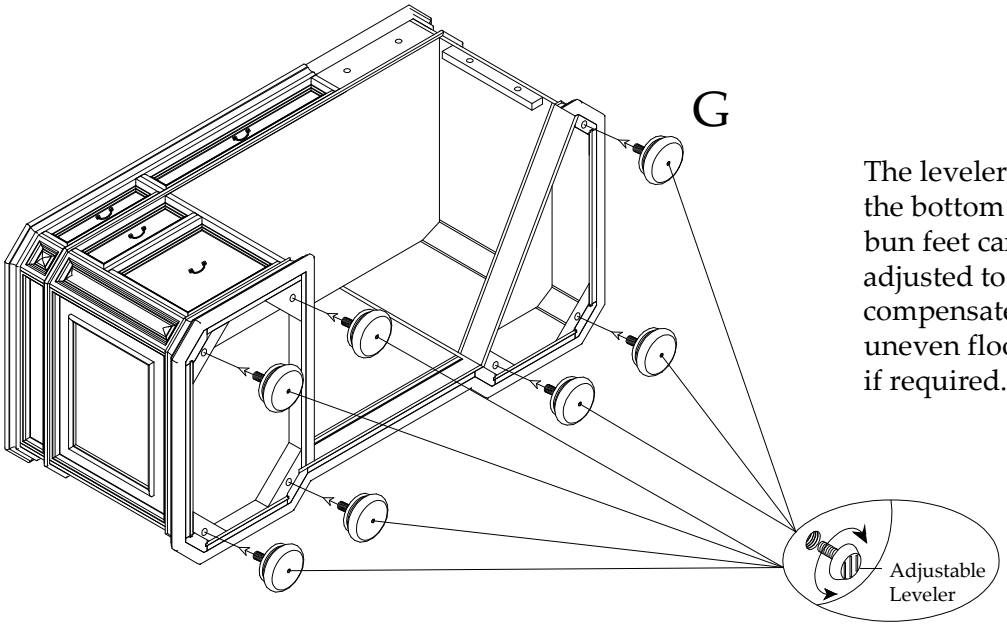

The levelers in the bottom of the bun feet can be adjusted to compensate for uneven flooring, if required.

Riverside FURNITURE

email: info@riverside-furniture.com

Allegro Home Office Assembly Instructions

Made in China

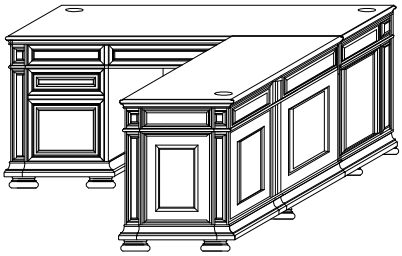

44728 L Return Desk

Step 7: Open the Door and insert Shelf Pins (I) into holes in side panels at the desired locations. Then place Wood Shelf (H) on the shelf pins.

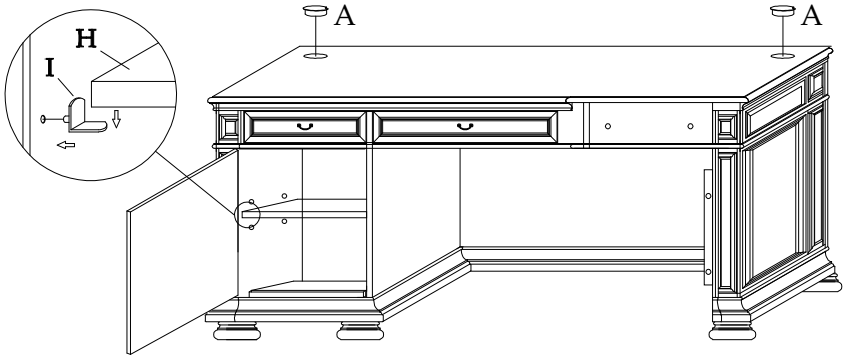

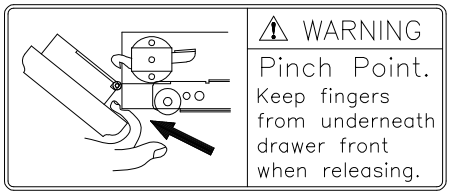

Step 8: After moving the Main Desk to it's final location in the room, assemble the return desk to the main desk, using the Allen-Head Bolts (D), Spring Washers (C) and Flat Washers (B). Tighten the Allen Bolts using the Allen Wrench (E).

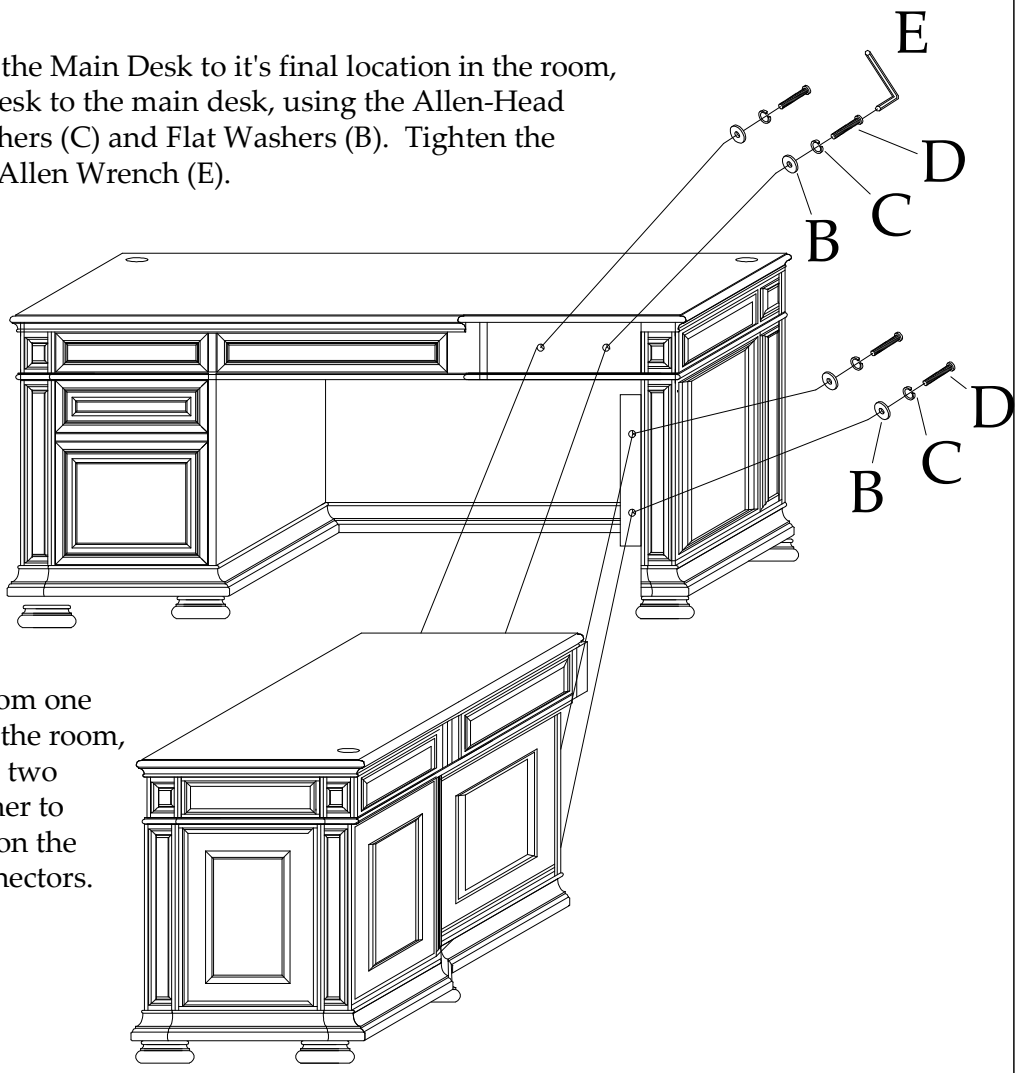

If moving this desk from one location to another in the room, always disconnect the two sections from each other to prevent undue stress on the furniture and the connectors.