riverside®
dream. live. connect.

Home Entertainment
Craftsman Home
2945

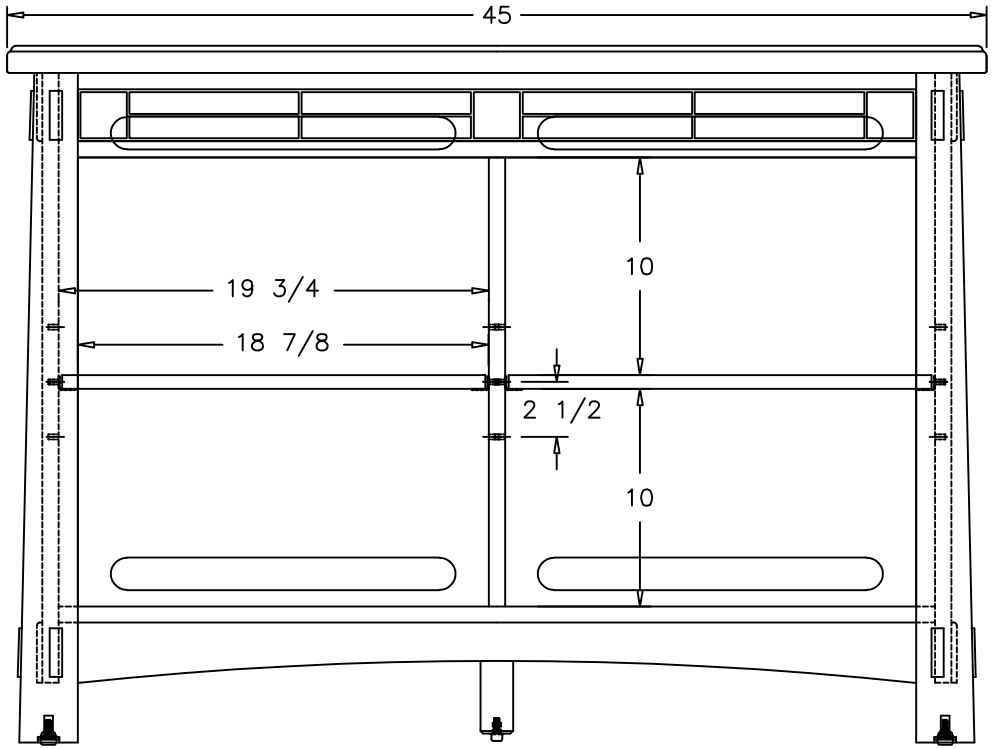

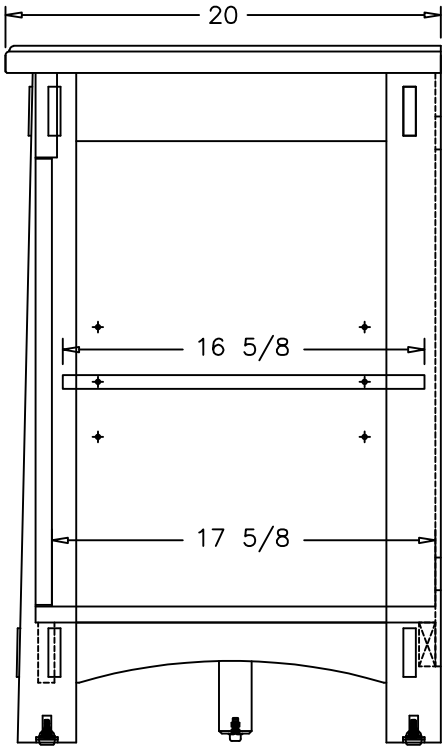

published 1-22-2010