Riverside
FURNITURE

email: info@riverside-furniture.com

Aberdeen Dining Room Assembly Instructions

Made in Viet Nam

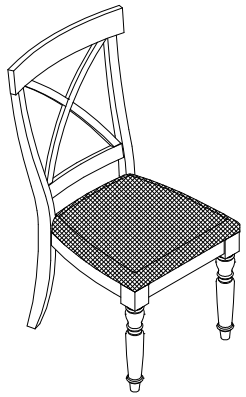

#21358 Side Chair

Components and Hardware List (for one chair)

Chair Back 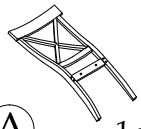 (A) 1 pc.	Chair Seat 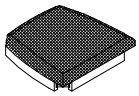 (B) 1 pc.	Front Leg (C) 2 pcs.	M5/16" x 3-1/4" Allen Head Bolt 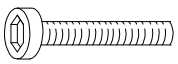 (D) 4 pcs.
M5/16" x 2-1/4" Allen Head Bolt 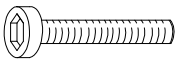 (E) 4 pcs.	M5/16" x 1-1/2" Allen Head Bolt 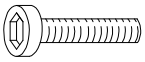 (F) 2 pcs.	5/16" Spring Washer (G) 10 pcs.	5/16" x 19 x 2mm Flat Washer (H) 10 pcs.
5mm Allen Wrench 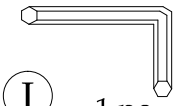 (I) 1 pc.			

Be sure to check all packing material carefully for small parts, which may have come loose inside the carton during shipment.

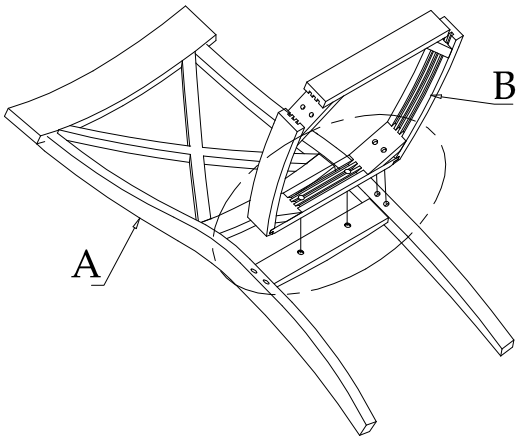

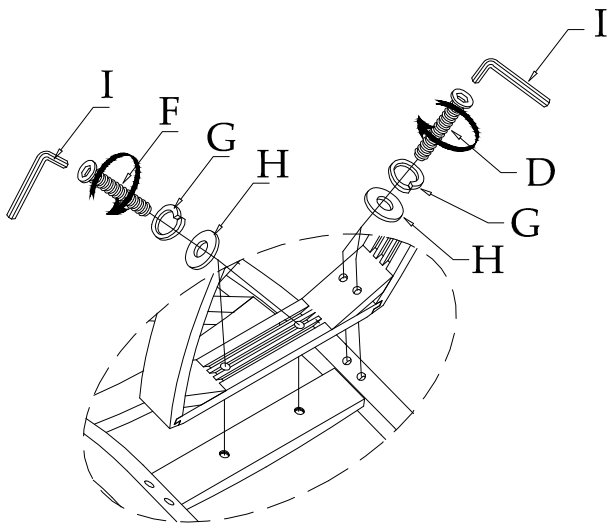

Steps:

1. Place the Chair Back Assembly (A) on a soft and smooth surface such as a blanket or carpet.
2. Attach Chair Seat (B) to the Back Assembly by using the 3-1/4" long Bolt (D) Spring Washer (G) and Flat Washer (H) into the back corners of the Seat and 1-1/2" long Bolt (F) Spring Washer (G) and Flat Washer (H) into the middle of the Seat, as shown. **Do not fully tighten Bolts until after next step.**

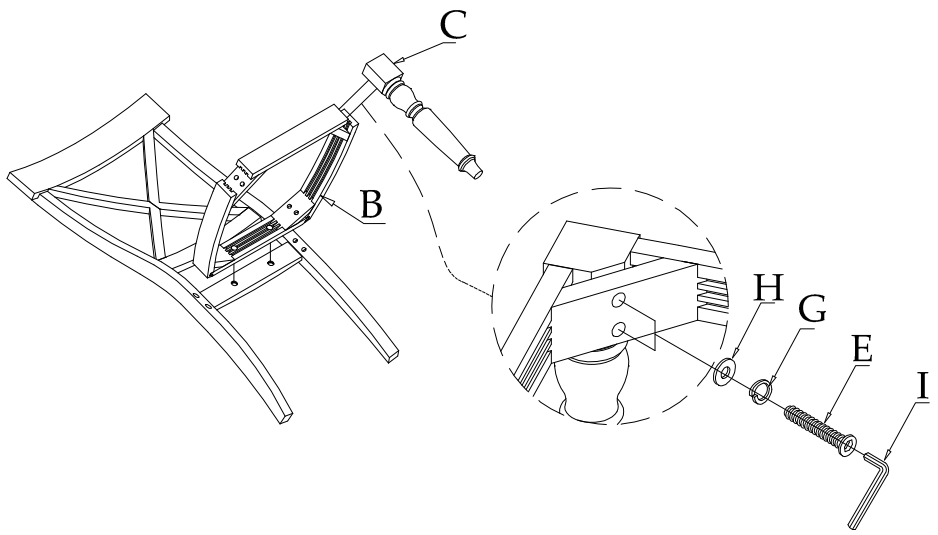

3. Attach Front Legs (C) to the Chair Seat (B) by using the 2-1/4" long Bolts (E) Spring Washer (G) and Flat Washer (H) as shown in **Step 3.**
4. Turn the Chair upright on a flat surface to level chair and tighten all Bolts using the Allen Wrench (I).

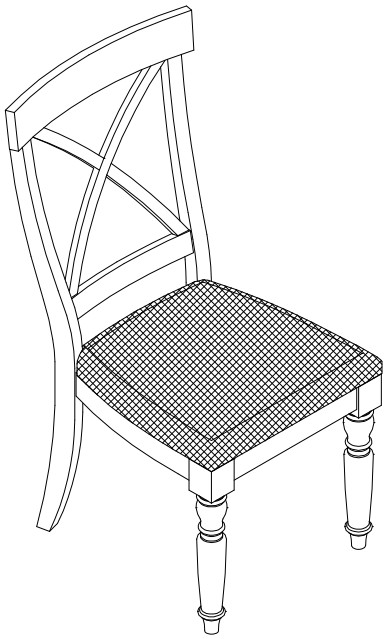

Step 4