Riverside
FURNITURE

email: info@riverside-furniture.com

Pembroke Dining Room Assembly Instructions

Made in China

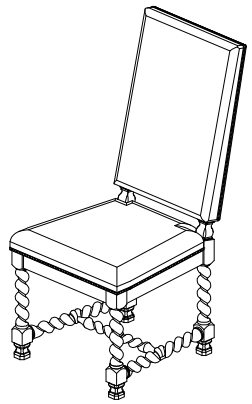

#17157 Side Chair

Components and Hardware List (for one chair)

Ø5/16-18 x 1 1/4" Long Allen Head Bolt (A) 1 pc.	Ø5/16-18 x 2" Long Allen Head Bolt (B) 4 pcs.	Ø5/16-18 x 3" Long Allen Head Bolt (C) 4 pcs.	5/16" Flat Washer (D) 9pcs.
5/16" Spring Washer (E) 9 pcs.	5mm Allen Wrench (F) 1 pc.	1-1/2" Wood Screw (for side stretchers) (G) 4 pcs.	1-1/4" Wood Screw (for middle stretcher) (H) 2 pcs.

Chair Back 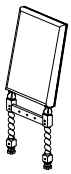 (I) 1 pc.	Chair Seat 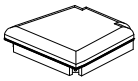 (J) 1 pc.	Front Leg 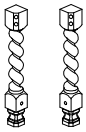 (K) 1 pc. Left 1 pc. Right	Side Stretcher 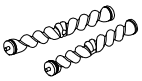 (L) 1 pc. Left 1 pc. Right	Middle Stretcher 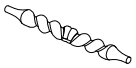 (M) 1 pc.

Be sure to check all packing material carefully for small parts, which may have come loose inside the carton during shipment. Separate, count and check all parts against the Components and Hardware List above. Failure to use the correct length bolts in the proper locations may result in an unsafe product and could also cause damage to the parts being assembled.

Step 1: Place the Chair Back on a padded surface, and assemble the Chair Seat to the Chair Back (as shown in Step 1), using the 1-1/4" long Bolts (A), in the middle of the back, and the washers as shown. Install the 3" long Bolts (C), using the same washers, into the back corners of the Chair Seat. Do not fully tighten any bolts until after chair has been completely assembled.

Step 2: Assemble the Left and Right Side Stretchers to the Chair Back (do not install wood screws until after next step).

Step 3: Assemble the Middle Stretcher (M) between the two Side Stretchers and assemble the Front Legs onto the Side Stretchers and Chair Seat. Pull the Front Legs and all Stretchers snugly together to verify the parts are assembled correctly. Attach the Front Legs using the 2" long Bolts (B), and the same washers as before. Set the assembled Chair upright on a flat surface to level chair. Tighten all Bolts using the Allen Wrench.
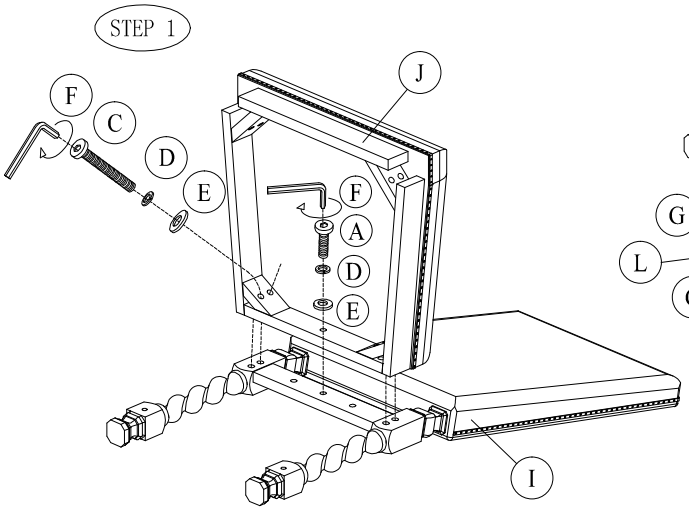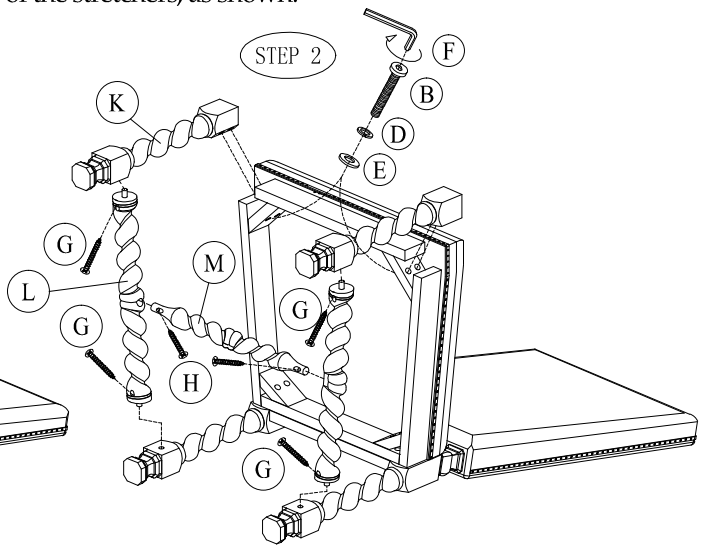
Step 4: Pull the Front Legs, all Stretchers and Chair Back snugly together and using your Phillips Screwdriver, install the Wood Screws (G) & (H) underneath each end of the stretchers, as shown.